GARDNER DENVER Drum

STP 20/106/10

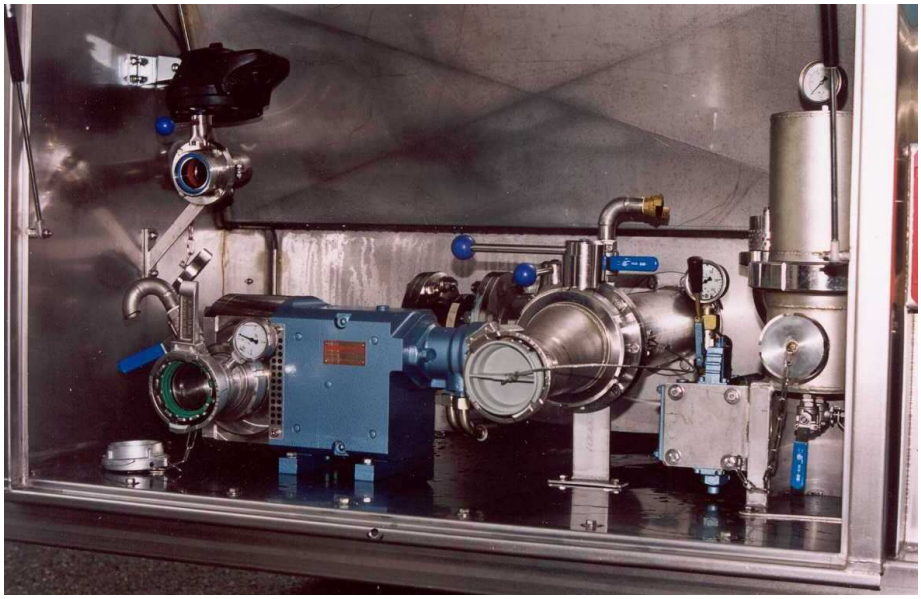

NEW STANDARD IN STAINLESS STEEL TANKER PUMPS

STP 20/106/10

MULTI PURPOSE LOBE PUMP

The new STP rotary lobe pump is specfically designed for the safe and quick un-loading of tank trailers and containers. The STP pump design is ideal for the transfer of both foodstuffs and chemicals across a wide viscosity range.

SHAFT SEALS

A key feature of the new STP 20/106/10 is the wide range of seal options available. For foodstuffs (glucoses, fruit juice concentrates, butter oil, etc.) the optimum choice is the single O-ring seal and for chemicals and solvents a multiple lip seal arrangement is available. In addition a range of mechanical seals are available where required. All seals can be fitted in the same pump geometry.
A different application can require a different seal, but does not require a new pump.

PROTECTION

The STP 20/106/10 can be protected against over pressure by means of pressure relief valve integral wit the pump frontcover. For cleaning purposes (CIP/SIP) the valve can be supplied with a leverlift manual override.

FEATURES & BENEFITS

The design of the STP 20/106/10 pump trilobe rotors and ports has been developed using Computational Fluid Dynamics techniques to provide a smooth, gentle pump characteristic minimising agitation and degradation of the pumped media. This results in a quick and quiet discharge even with high viscous media. The compact pump build combined with a robust gearbox design provides for discharge pressure of 10 bar.

SPECIFICATIONS

flow	: 63 m³/hr @ 0 bar - 1 cSt
speed	: 0 – 1000 rev/min
pressure	: 10 bar, 11 bar peak
viscosity	: to 100.000 cSt
temperature	: 70 °C (CIP/SIP at 130 °C)
protection	: relief valve with lever lift
connections	: 3", 4" DIN, SMS or BSP
wetted materials	: St. St. 316 type
standards	: 3A and FDA norm (sanitary)
shaft seals	: o-ring, lip- or mechanical seal
direction of rotation	: bi-directional
dimensions (lxbxh)	: 373x289x287 mm.
drive options	: P.T.O., hydraulic, electrical, or (diesel) engine
weight	: 63 kg
	: 66,5 kg with relief valve

DRIVE OPTIONS

The STP 20/106/10 is equipped with an internal spline shaft to fit a close coupled hydraulic motor. A plain shaft extension with key is available as an option where a direct coupled electric, diesel or PTO drive is required.

FITTING

The compact build of the STP 20/106/10 results in a minimum required space for mounting. The pump is designed for universal mounting with three sides of the gearbox pre drilled to accept the mounting feet. The rotor case can be invertedwhere required adding flexibility to the port arrangement.On request the pump can be suplied with sealed heating tanks for temperature sensitive products. The services offered by Gardner Denver include for the fitting of the pump onto customers trailers in one of our workshops when required.

DRAWINGS

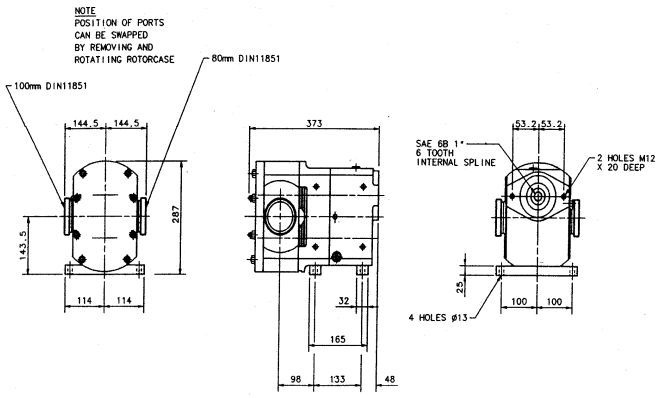

PERFORMANCE CURVES

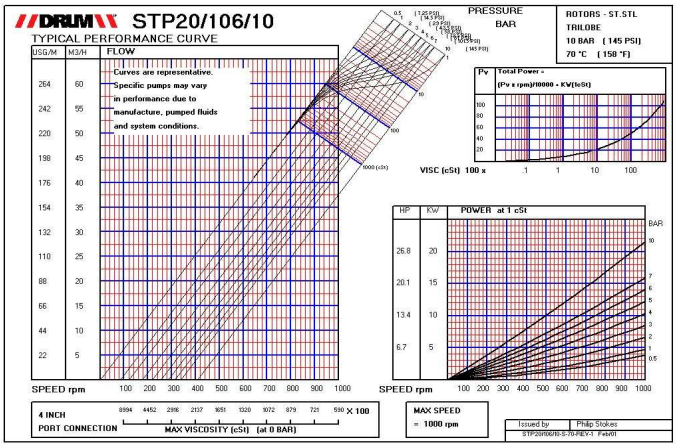

Gardner Denver